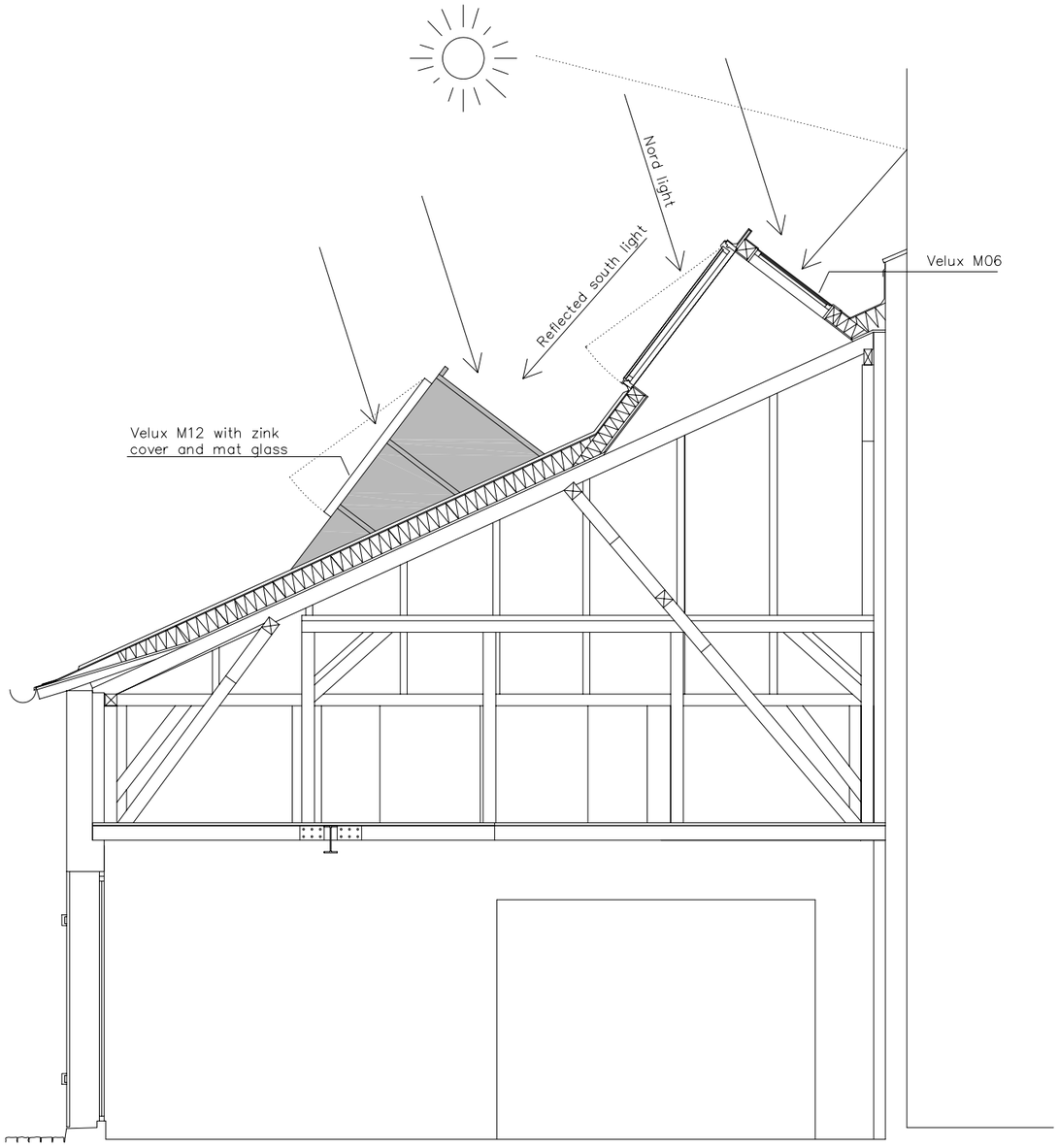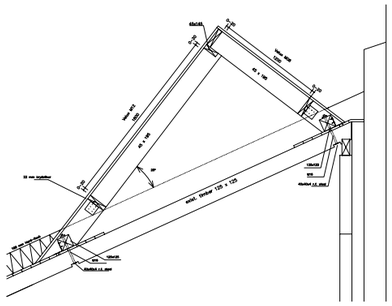
Nord light
Reflected south light
Velux M06
Velux M12 with zink
cover and mat glass